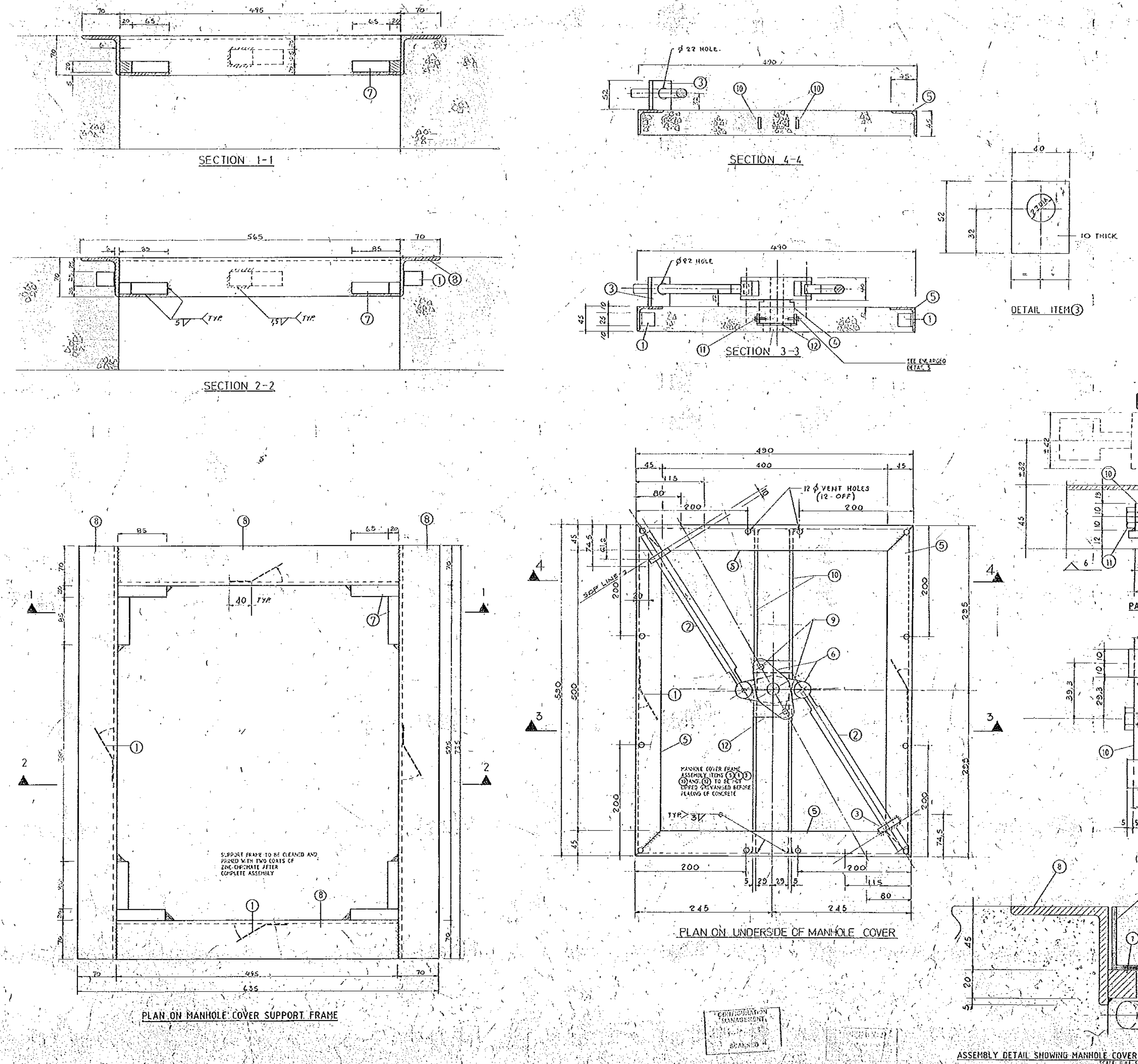

DESCRIPTION

1. 25mm x 15mm MILD STEEL BONDING TIES, 100mm LONG
2. 20mm DIAMETER LOCKING BAR
3. 45mm x 10mm MILD STEEL PLATE 52mm LONG WITH 22mm ϕ HOLE
4. MANCO S.G. CAST IRON CYLINDRICAL BARREL. BARREL TO BE DRILLED AND TAPPED TO SUIT ITEM (11)
5. 45mm x 45mm x 3mm MILD STEEL ANGLE
6. MANCO LOCKING DEVICE CAST IN S.G. IRON
7. 20mm x 20mm MILD STEEL SQUARE BAR 85mm LONG
8. 70mm x 70mm x 6mm MILD STEEL ANGLE
9. 2 x 12mm ϕ STAINLESS STEEL STUDS x 110mm LONG WITH THREADS OF 25mm AT ONE END AND 6mm AT OTHER END OF STUD
10. 2 x 20mm x 5mm MILD STEEL FLAT BARS x 583mm LONG, WELDED TO VERTICAL LEG OF (5) AT EACH END
11. 2 x 8mm ϕ H.T. BOLTS x 22mm LONG TO SECURE MANCO CYLINDRICAL BARREL TO (12)
12. 2 x 20mm x 5mm MILD STEEL FLAT BARS x 78mm LONG WELDED AS SHOWN EACH FLAT TO HAVE ONE HOLE DRILLED AND TAPPED TO SUIT 12mm ϕ STAINLESS STEEL BOLT
13. STAINLESS STEEL NYLOC NUT TO SUIT ITEM (9)

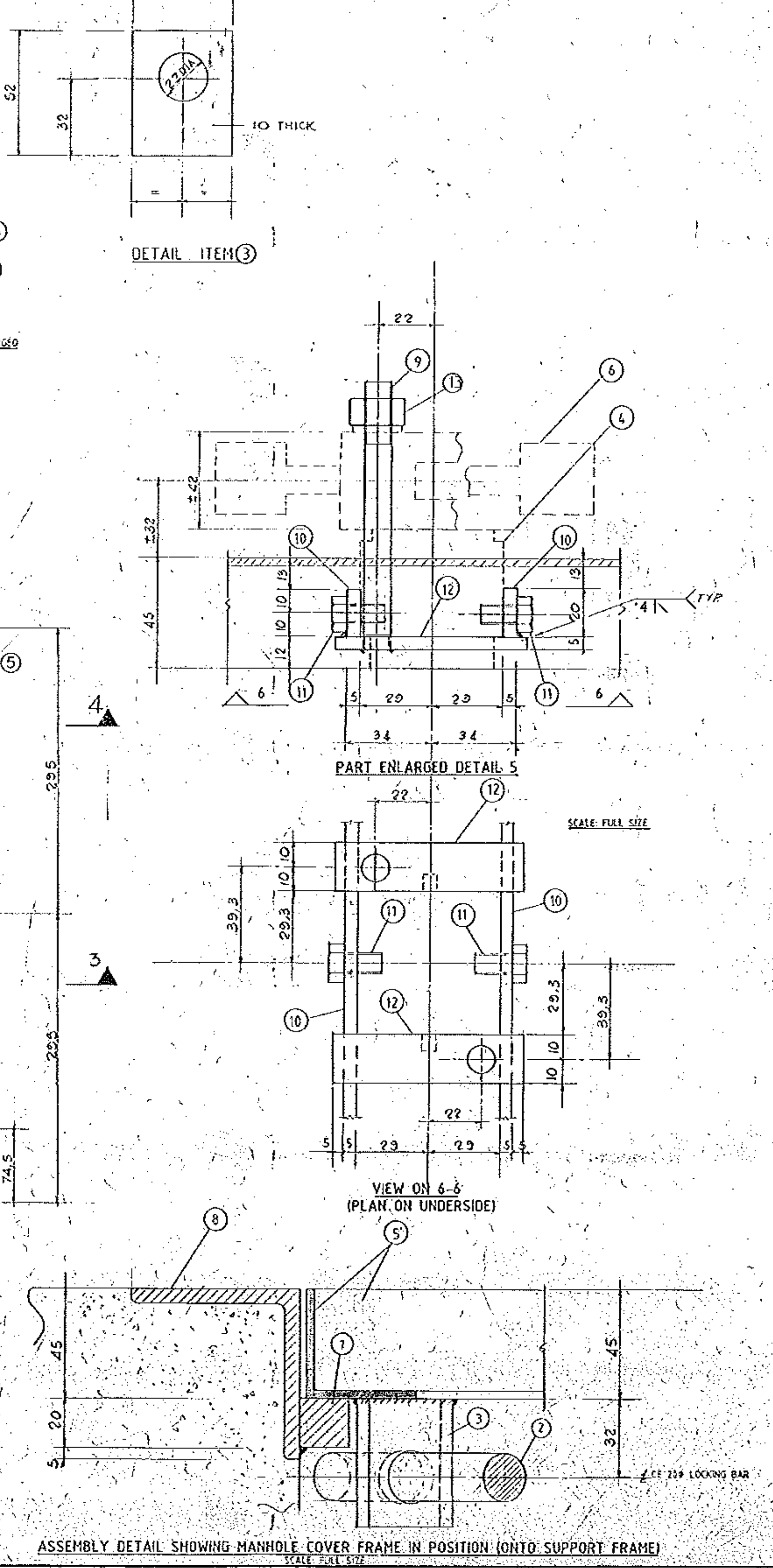

DRG. No. 11860

NOTES:

1. STEEL FIBRE CONCRETE TO CONTAIN 4% BY WEIGHT OF 25mm LONG STEEL FIBRES
2. STONE AGGREGATE TO BE 7mm MAXIMUM
3. CUBE STRENGTH OF CONCRETE TO BE 45MPa AT 28 DAYS
4. MANHOLE COVER FRAME TO BE HOT DIPPED GALVANISED ACCORDING TO TABLE 2 OF SABS 763 FOR HEAVY DUTY APPLICATION ON A2 ARTICLES
5. SUPPORT FRAME TO BE CLEANED AND PRIMED WITH TWO COATS OF ZINC-CHROMATE AFTER COMPLETE ASSEMBLY.
6. SEQUENCE OF MANUFACTURE OF MANHOLE CO[illegible]
   a) MANHOLE COVER FRAME ITEMS (5)(3)(1)[illegible] AND (12) TO BE ASSEMBLED, WELDED AND VENTILATION HOLES DRILLED BEFORE GALVANISING
   b) AFTER GALVANISING ITEMS (12) TO BE DRILLED AND TAPPED TO SUIT ITEMS (9)
   c) ITEMS (9) TO BE INSTALLED AND WELDED TO ITEMS (12)
   d) ITEM (6) TO BE BOLTED TO ITEMS (9)
   e) MANHOLE COVER FRAME TO BE PLACED ON LEVEL SURFACE AS SHOWN ON SECTION [illegible] ITEMS (9) BRACED AND STEEL FIBRE CONCRETE CAST
   f) CONCRETE TO FILL UNDERSIDE OF FRAME COMPLETELY AND BE STRUCK LEVEL WITH TOP OF FRAME
   g) FINAL ASSEMBLY OF LOCKING MECHANISM LOCKING BARS ETC. WITH NYLOC NUTS ITEMS (13)

REVISIONS

No	DATE	CHECKED	APPROVED	DESCRIPTION
1	[illegible]	[signature]	[signature]	LOCKING MECHANISM LOCATION [illegible] ETC. ALTERED

STATION | WBS 000052 | DOC. TYPE DSD | 1

NUMBER	TITLE
A5812	DETAIL OF KEY AND LOCKING BOLT

REFERENCE DRAWINGS

RAND WATER BOARD
BOX 1127 JOHANNESBURG 2000 TEL: 682-0911
A.S. SMIT GENERAL MANAGER ENGINEERING

JOB No		CHECKED	[signature]
CONTRACT No		SECTION HEAD	[signature] 91-08-15
SCHEME		APPROVED	[signature]
DRAWN BY	[illegible]	CAPACITY	CEW
TRACED BY		DATE	91-08-16
DATE	15/8/91		

PIPELINES AND BOOSTERS

STANDARD DETAILS

STEEL FIBRE CONCRETE MANHOLE COVER AND SUPPORT FRAME

SCALE 2:5 U.O.S.

DRG. No. 11860 [1]