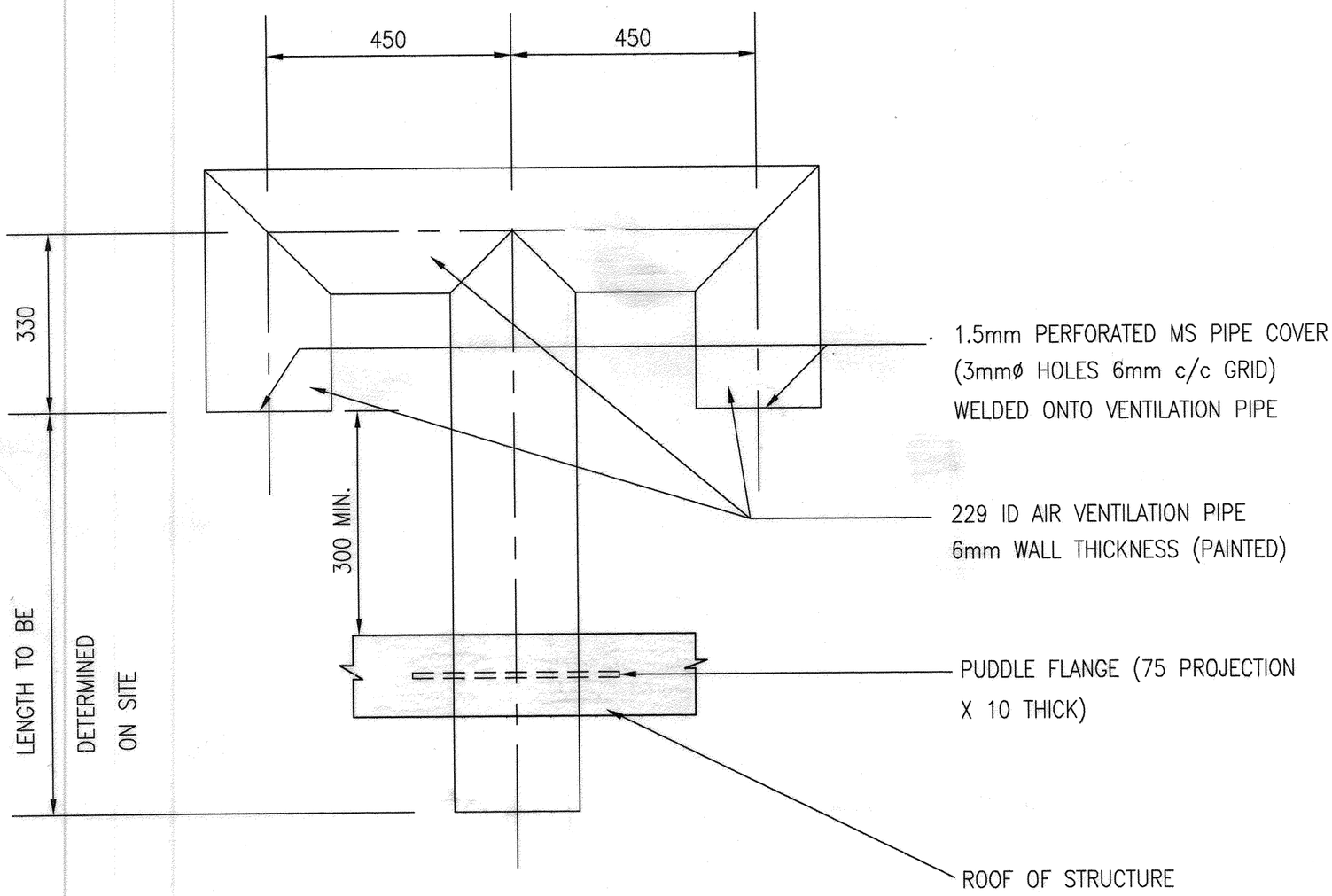

DETAILS OF AIR VENTILATION PIPE

REVISIONS				
No	DATE	CHECKED	APPROVED	DESCRIPTION

NUMBER	TITLE

REFERENCE DRAWINGS

RAND WATER
BOX 1127
JOHANNESBURG
2000
TEL: 682-0911

C.M.F. HALL Pr. Eng
GENERAL MANAGER
ENGINEERING

JOB No		CHECKED	
CONTRACT No		SECTION HEAD	7/10/96
SCHEME		APPROVED	Pr. Eng
DRAWN BY	LCL	CAPACITY	CEW
DATE	SEPT. '96	DATE	96.10.07

PIPELINES AND BOOSTERS

STANDARD DETAIL

T-PIECE AIR VENTILATION PIPE

SCALE 1 : 20

DRG No. B 4141

REVISION

MICROFILMED
IF ANY ALTERATIONS ARE MADE TO THIS DRAWING NOTIFY ENG. RECORDS.

CONFIGURATION MANAGEMENT
2009 -02- 18
SCANNED

STATION	WKS	DOC. TYPE	S
RW	** UGT	DMD	C